DEMAGNETISERS

These demagnetisers have been designed to remove the remaining magnetism from the pieces after having been in contact with a magnetic field.

TABLETOP MODELS

This demagnetiser is ideal for workshops as it removes the remaining magnetism from components, tools, screws, bearings, etc. The piece to be demagnetised should be passed over the device.

This model is not designed for continuous use and cannot be connected for more than 10 minutes at one time. It has a thermostat that disconnects its when it reaches the maximum permitted temperature (70ºC); it cannot be reconnected until the temperature has dropped to the permitted levels.

Input voltage: 220-240 V / 50-60 Hz.

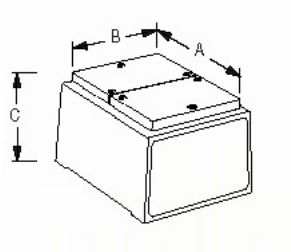

TABLETOP DEMAGNETISERS						
CODE	A mm	B mm	C mm	INTENSITY A	POWER V.A.	WEIGHT Kg
70.00.001	160	120	115	1,3	286	5,5
70.00.002	220	170	122	3	660	12

PORTABLE MODEL

This model is used to remove the remaining magnetism from large pieces. The device should be passed over the piece manually.

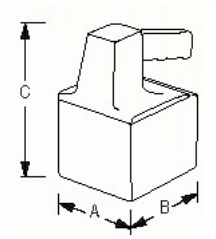

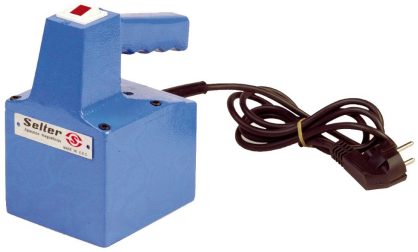

This demagnetiser is not designed for continuous use and cannot be connected for more than 10 minutes at one time. It has a thermostat that disconnects its when it reaches the maximum permitted temperature (70ºC); it cannot be reconnected until the temperature has dropped to the permitted levels.

Input voltage: 220-240 V / 50-60 Hz.

PORTABLE DEMAGNETISERS						
CODE	A mm	B mm	C mm	INTENSITY A	POWER V.A.	WEIGHT Kg
70.01.001	206	120	180	5,8	1.330	5,5

TUNNEL MODELS

This demagnetiser is designed for continuous use, it can be connected permanently.

This model is suitable for automatic processes where there is a flux of material. The pieces to be demagnetised should be passed through the inside of the device.

Input voltage: 220-240 V / 50-60 Hz. Other voltages on request.

Customised models and measurements on request.

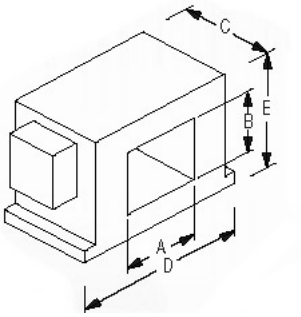

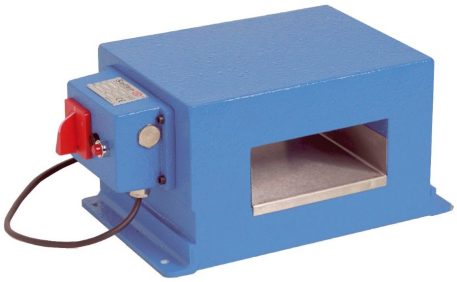

TUNNEL DEMAGNETISERS								
CODE	A mm	B mm	C mm	D mm	E mm	INTENSITY A	POWER V.A.	WEIGHT Kg
70.13.005	50	50	100	307	236	3,9	900	15
70.13.012	150	60	200	323	166	3,6	794	27
70.13.017	200	100	200	415	240	10,5	2066	45

UNDER TABLE DEMAGNETISER
FOR CONTINOUS SERVICE

CHARACTERISTICS

During the manufacturing process of a batch of pieces, they are often subjected to a magnetic field and acquire a certain remnant magnetism.

In most situations, to continue or to finish the production, it is necessary to remove the magnetism from these pices. The most convenient is to use a continuous service demagnetiser.

Continuous service demagnetisers are usually placed under a conveyor belt.

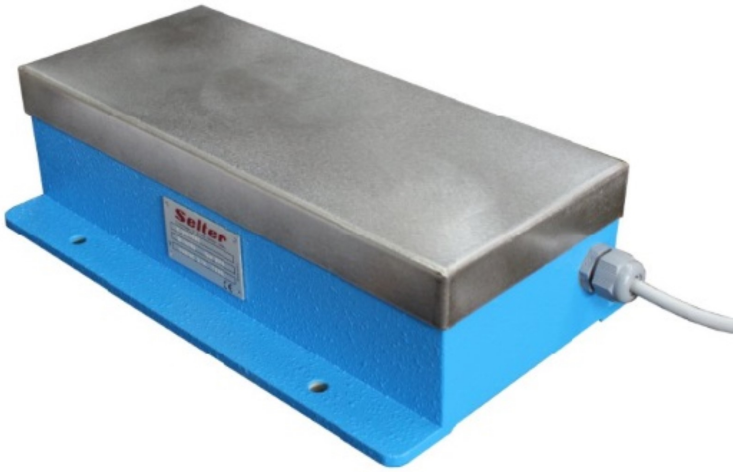

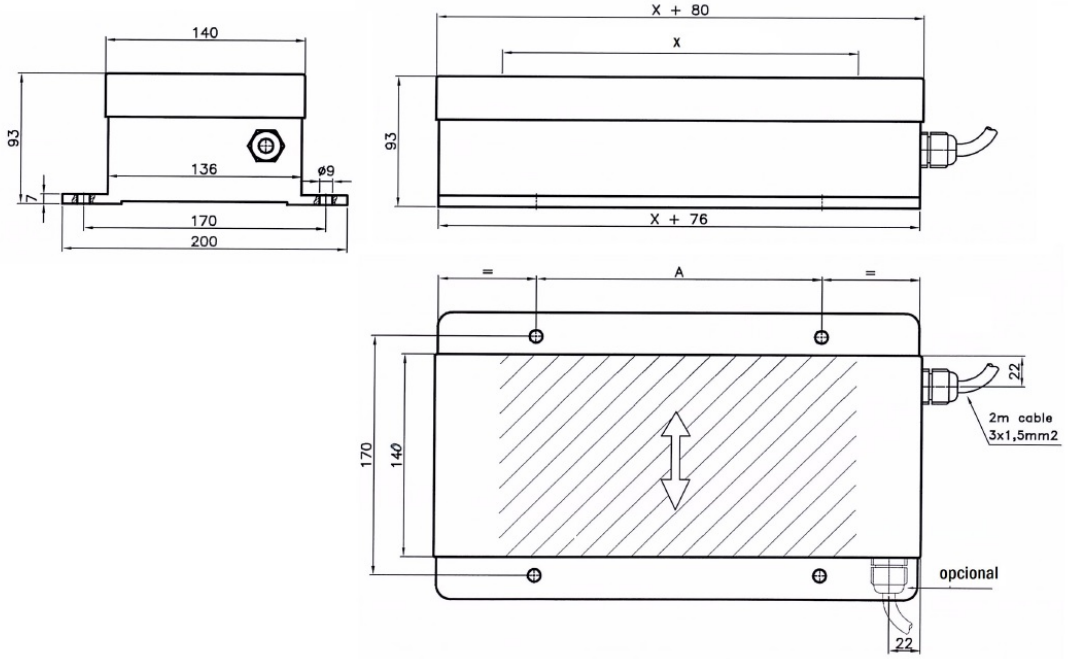

UNDER TABLE DEMAGNETISERS FOR CONTINOUS SERVICE											
CODE	EFECTIVE DIMENSIONS			TOTAL DIMENSIONS			FIXING HOLES POSITION		TENSION	POWER V.A.	ED
	A mm	B mm	C mm	A mm	B mm	C mm	mm	mm			
70.05.002	150	140	93	230	140	93	150	170	230 VAC 50/60 Hz	470	100%
70.05.004	200	140	93	280	140	93	150	170	230 VAC 50/60 Hz	560	100%
70.05.005	250	140	93	330	140	93	200	170	230 VAC 50/60 Hz	720	100%
70.05.003	300	140	93	380	140	93	250	170	230 VAC 50/60 Hz	880	100%